Rockpanel®

PlankClip system

MAXIMUM AESTHETICS AND SAFETY THANKS TO THE **PLANKCLIP FASTENING SYSTEM**

MADE
FROM STONE.™

FREEDOM OF **DESIGN.**

PlankClip system

The concealed, mechanical fixing system for horizontal or vertical planks / lamellas offers you exceptional design freedom thanks to a wide range of offset options on the façade. With narrow joints of 6 mm, you can create a modern appearance that meets the highest aesthetic demands. The system allows the installation of panels in heights from 100 mm to 300 mm, whereby different panel-lengths can be combined to create a visually appealing laying pattern.

The PlankClip is suitable for both timber and metal subconstructions. The quick and easy installation saves you valuable time and money. The system also complies with Euro class A2 as to fire, ensuring maximum safety. The PlankClip system is ideal for remediation of non firesafe installations of real timber planks or tongue and groove systems.

Discover the advantages and flexibility of our innovative fastening system and design your façades more individually than ever before.

Aesthetic and versatile

- Non-visible fastening system, but still demountable
- Panel can be cladded on either metal or timber profiles
- Horizontal and vertical orientation of the panel possible
- Various offset options can be realized
- Planks can be cut from standard boards - freedom of design and a wide range of colours and designs are available

Secure

- Mechanical fastening of the panels
- Tested and approved system with Rockpanel A2 9 mm boards (ETA 24/0911)
- Fire rating class A2-s1,d0 when used with timber or aluminium subconstruction* (check exact end-use method in ETA 24/0911).

Introducing a revolutionary system designed for easy and efficient construction. It features straightforward installation with a comprehensive kit and on-site assembly, reducing costs and logistics. Replaceable panels simplify maintenance without dismantling the structure.

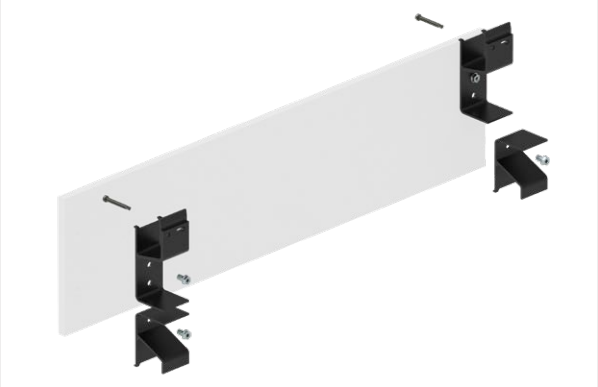

Easy Installation

- Straightforward installation
- Comprehensive installation kit
- On-site installation
- Flexible directional installation
- The edge of the clip functions as a measuring stick
- No use of EPDM gaskets, which is a saving when using a timber sub-construction

Planning and maintenance efficiency

- Quantity calculation software
- Drilling pattern output
- Project-specific static calculations*
- Pre-calculated fixing tables available for buildings up to 10 m
- Dismountable system – it is possible just to remove a single plank (as opposed to stacking clips or tongue/groove systems)

*** Discover the calculation tool:**

The coordinated components are offered as a complete installation kit. Depending on the panel width, different components are available in the corresponding installation kit.

Clip01 / RClip

RCLIP h 100 mm x d 40 mm x w 36 mm

- Can be used as standalone when width is 100-145 mm
- Almost invisible when installed due to black coating to ensure discrete installation
- Simple installation thanks to depth stop
- Guarantee of thermal expansion by fixing as a fixed and sliding point
- Resulting in a ventilation cavity of ≥ 40 mm which allows the benefits of pressure equalisation

Clip02 / RClip Short

RCLIP Short h 60 mm x d 40 mm x w 36 mm

- Additional clip used in combination with the RCLIP, when plank width is 150-300 mm

SFS TU-S 6x9 mm anchor

- Enables time-saving installation of the clips on the rearside of the panels
- Simple standard blind hole is sufficient - no complex undercut required
- Blind holes can also be drilled on site
- Secured against loosening
- Removal possible via hexagon head
- Tailored to the highest requirements of the panels

SFS SDAW fastener 4.5 x 34 mm

- Suitable for timber and aluminium substructures
- Virtually invisible due to the black coating of the fastener
- Over-tightening protection due to ribs below the fastener head

Depth locator universal

Depth locator for blind hole

VHM-6,0×41,5

Suitable drill for the depth locator.
Results in the correct 6.5 mm depth blind hole

SQ1-68-HEX-1/4”

Suitable bit for installing the SDAW fastener through the narrow 6 mm panel joint

Plankclip starter-clip

Starter rail for the installation of the first panel.
Only necessary when panels in heights of ≥ 150 mm are usede

INSTALLATION STEPS.

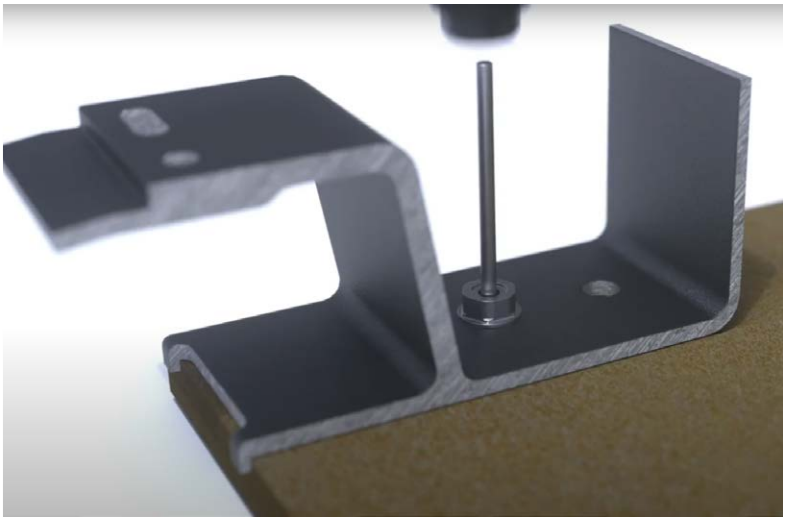

Step 1:

Drill blind holes to a depth of 6.5–7 mm according to the drilling pattern.

Step 2:

Add clips to install on the facade. Fit clips to the panels using TU-S Diameter: Ø 5.9 – Ø 6.0 mm.
www.rockpanel.com/uk/support/resources/cad-drawings

Step 3:

Postion the first panel on the aluminium or timber substructure.

Step 4:

Fix the panels by using the SDAW-Fastener. For each panel one fixed-point shall be created by fixing the PlankClip through the roundhole. All other PlankClips are fixed through the slotted-hole to create a sliding-point.

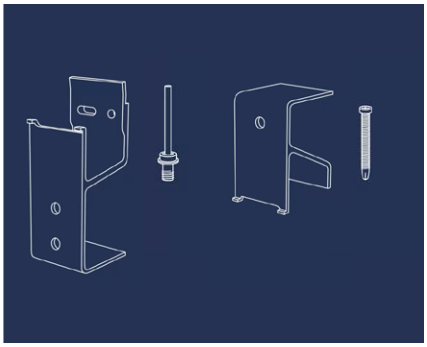

Step 5:

Position the next panel on the substructure.
The use of 6 mm spacers is recommended.

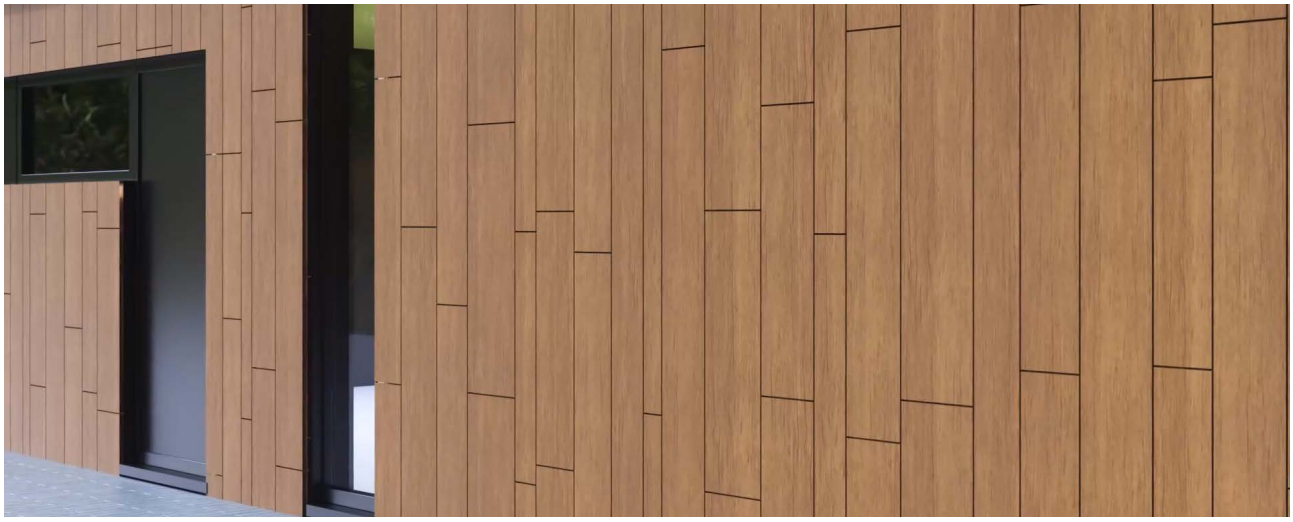

Step 6:

Repeat the steps until your facade is completed.

View the instruction video:

Example of panel pattern with offset

The possible offsets depend on the selected panel width and the statically determined center distance for the subframe.

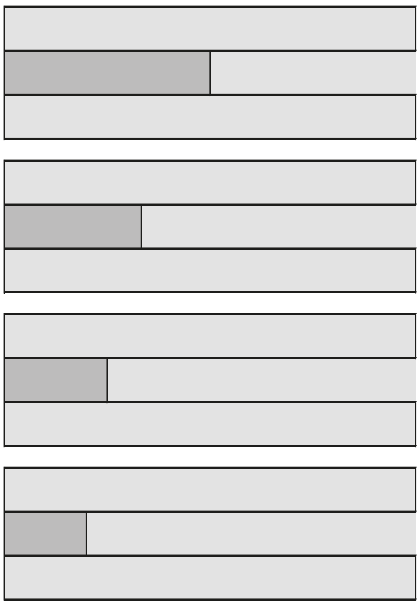

1:2

1:3

1:4

1:5

GENERAL PERFORMANCE.

The following table provides the ultimate performance values of the PlankClip System under wind load, expressed as the maximum allowable wind load based on varying subframe spacings and panel heights. The distances and corresponding capacities are determined in accordance with European Technical Assessment ETA-24/0911.

All wind load values shown are factored design loads, with the partial safety factor y_Q = 1.5 according to Eurocode already included.

Span		1-field span	2-field span	3-field span	4- and more field span
600	100–115	–1.676 kN/m²	–1.697 kN/m²	–1.928 kN/m²	–1.845 kN/m²
	115–145	–1.343 kN/m²	–1.360 kN/m²	–1.545 kN/m²	–1.478 kN/m²
	150–300	–1.798 kN/m²	–1.190 kN/m²	–1.352 kN/m²	–1.293 kN/m²
500	100–145	–1.594 kN/m²	–1.632 kN/m²		
	150–300	–2.134 kN/m²	–1.427 kN/m²		
400	100–145	–1.959 kN/m²	–2.040 kN/m²		
	150–300	–2.623 kN/m²	–1.784 kN/m²		
↑ Spacing subframe b mm	**↑ Panelheight H mm**				

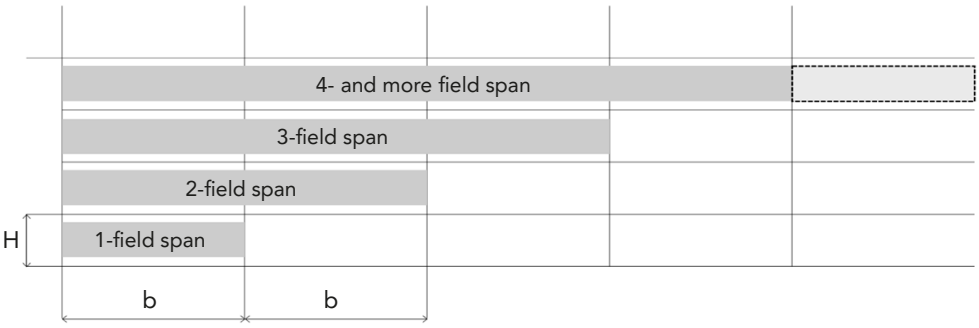

H: Panel height (mm)
b: Spacing subframe (mm)

United Kingdom – Loadtable

The following tables show the designed wind loads acting in the respective areas and the maximum possible spacing (b) for the PlankClip System.

Wind loads are calculated for rectangular buildings according to BS EN 1991-1-4:2005+A1:2010. The values apply to the entire façade, with wind actions determined for corner zone "A". All wind loads are factored. The partial safety factor y_Q = 1.5 in accordance with Eurocode is already included.

OK	Combination possible
n/a	Location requires project specific check. Part of worst-case scenario does not comply
OK x)	Suitable, but with limitations (see comments at the end of the table)

The table is to be understood as a recommendation. If no suitable combination is listed, or if your project characteristics (e.g. site altitude) differ from those assumed in the table, please contact your Rockpanel supplier for further assistance.

→ The following tables are valid, when the reduced wind load (pressure equalization) according BS EN 1991-1-4:2005+A1:2010 (NA.2.31, NA.2.32) is considered. See Preconditions - Pressure equalization.

For building heights (z_e) ≤ 9 m – Country Terrain									
$v_{b,map}$ [1]					**27 m/s**				**24 m/s**
Distance to shoreline		**≥ 0.1 km < 1.0 km**	**> 1.0 km ≤ 5.0 km**	**> 5.0 km ≤ 10.0 km**	**> 10 km**	**≥ 0.1 km < 1.0 km**	**> 1.0 km ≤ 5.0 km**	**> 5.0 km ≤ 10.0 km**	**> 10 km**
Altitude above sea level					**≤ 50 m**				**≤ 200 m**
Designed wind-load kN/m²		**–1.39**	**–1.37**	**–1.24**	**–1.19**	**–1.43**	**–1.38**	**–1.28**	**–1.18**
600	100–145	n/a	n/a	OK	OK	n/a	n/a	OK	OK
	150–300	n/a	n/a	OK[2]	OK	n/a	n/a	OK[2]	OK
500	100–145	OK	OK	OK	OK	OK	OK	OK	OK
	150–300	OK	OK	OK	OK	n/a	OK	OK	OK
400	100–145	OK	OK	OK	OK	OK	OK	OK	OK
	150–300	OK	OK	OK	OK	OK	OK	OK	OK
↑ Spacing subframe b mm	**↑ Panel-height H mm**								

[1] Annex to United Kingdom – Windzone map
[2] 2- and 3-field spans not possible

For building heights (z_e) ≤ 9 m – Town Terrain									
$v_{b,map}$ [1]					**27 m/s**				**24 m/s**
Distance to shoreline		**≥ 0.1 km < 1.0 km**	**> 1.0 km ≤ 2.0 km**	**> 2.0 km ≤ 10.0 km**	**> 10 km**	**≥ 0.5 km < 1.0 km**	**> 1.0 km ≤ 2.0 km**	**> 2.0 km ≤ 10.0 km**	**> 10 km**
Altitude above sea level				**≤ 100 m**	**≤ 150 m**			**≤ 250 m**	**≤ 320 m**
Designed wind-load kN/m²		**–1.25**	**–1.20**	**–1.15**	**–1.14**	**–1.28**	**–1.22**	**–1.17**	**–1.19**
600	100–145	OK	OK	OK	OK	OK	OK	OK	OK
	150–300	OK[2]	OK[2]	OK	OK	OK[2]	OK[2]	OK	OK
500	100–145	OK	OK	OK	OK	OK	OK	OK	OK
	150–300	OK	OK	OK	OK	OK	OK	OK	OK
400	100–145	OK	OK	OK	OK	OK	OK	OK	OK
	150–300	OK	OK	OK	OK	OK	OK	OK	OK
↑ Spacing subframe b mm	**↑ Panel-height H mm**								

[1] Annex to United Kingdom – Windzone map
[2] 2- and 3-field spans not possible

→ If it's desired to take no pressure equalization according to BS EN 1991-1-4:2005+A1:2010 (NA.2.31, NA.2.32) into account, the following table shall be used.

For building heights (z_e) ≤ 6 m								
$v_{b,map}$ [1)]								**22.5 m/s**
Distance to shoreline		**≥ 1 km**	**≤ 5.0 km**	**≤ 10.0 km**				**≥ 20 km**
Distance inside town terrain		**≥ 0.1 km**			**≥ 0.5 km**	**≥ 1.0 km**		**≥ 2.0 km**
Altitude above sea-level		**≤ 30 m**	**≤ 50 m**	**≤ 65 m**	**≤ 80 m**	**≤ 85 m**	**≤ 110 m**	**≤ 150 m**
Designed wind-load kN/m²		**–1.39**	**–1.37**	**–1.24**	**–1.43**	**–1.38**	**–1.28**	**–1.18**
600	100–145	n/a	n/a	n/a	n/a	OK	OK	OK
	150–300	n/a	n/a	n/a	n/a	OK	OK	OK
500	100–145	OK	OK	OK	OK	OK	OK	OK
	150–300	OK	OK	OK	OK	OK	OK	OK
400	100–145	OK	OK	OK	OK	OK	OK	OK
	150–300	OK	OK	OK	OK	OK	OK	OK
↑ Spacing subframe b mm	**↑ Panelheight H mm**							

[1)] Annex to United Kingdom – Windzone map

Annex to United Kingdom Loadtable

Windzone map

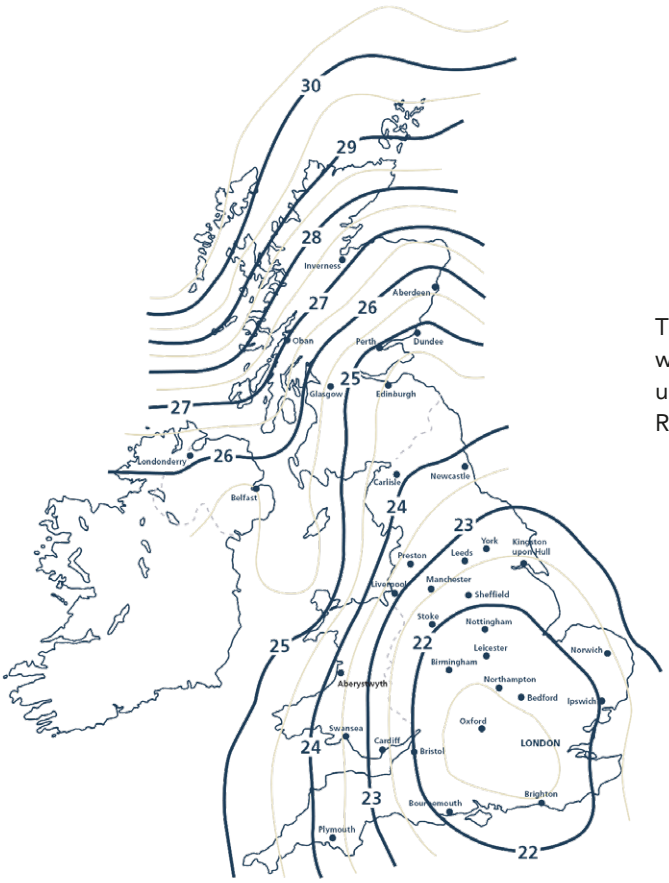

This map is an indication of the fundamental basic wind velocity according to BS-EN 1991-1-4. If you are unsure which zone the building is located please contact Rockpanel.

Preconditions - Pressure equalization

If certain conditions are met, the pressure coefficient (cpe) decreases, resulting in a lower windload. Pressure equalization is specified in Eurocode EN 1991-1-4, with further details in the National Annex.

The following parameters must be met:

- The ratio of open joints to panels area is ≥ 1%. This is achieved by all panel-heights due to the 6 mm joint width.
- The internal pressure within the ventilated cavity must remain undisturbed by air movement between different sides of the building. To ensure this, a cavity closure should separate one building side in corner areas, see figure "closed corners".
- The cavity depth must be between 40 and 100mm. The minimum of 40 mm is met by using the PlankClip system.

→ Further details are available in the national annex BS EN 1991-1-4:2005+A1:2010.

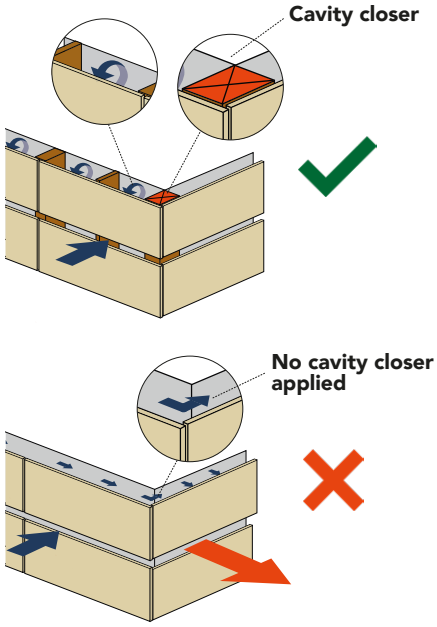

Cavity closers need to be correctly applied.

For detailed drawings visit:

RP PCB UK / 202508 / EN / Version 2.0

MADE **FROM STONE.**

Rockpanel®

www.rockpanel.co.uk
Learn more about us, ask for product samples
and be inspired by attractive reference projects.

www.facebook.com/rockpanel
Be the first to discover our latest international projects.

www.x.com/rockpanel
Follow us for the latest news and updates.

Engage and interact.

www.instagram.com/rockpanel
Get inspired.